Indoor monobloc water-water unit

LEP 50 - 470 kW

Total heat recovery multi-purpose unit | Multi-purpose unit - 2-pipe system | Multi-purpose unit - 4-pipe system | Scroll compressor | R-410A refrigerant | Cooling / Heating

Maximum efficiency with total recovery and dissipation in water.

LEP units are actually multi-purpose, they totally recover the condensation heat and they are characterized by the simultaneous production of cold and hot water. Available for two-pipe systems with the request of DHW production or in four-pipe systems, they are conceived for average-high power applications (multi residential or commercial unit) and they guarantee a high thermodynamic efficiency and a wide configurability both in terms of accessories and in terms of refrigeration cycle.
LEP series is characterized by a reduced size, high thermodynamic cycle COP , no external noise, reduced cooling load and it is composed of 24 models with refrigeration capacity ranging from 50 to 470 kW both for the standard version and the silenced one.
Multi-purpose LEP machines have six water connections linked to three different hydraulic circuits of which a dissipation one (hot or cold) opposed to the consumption. The users differ as for two-pipe system in which there is a hot/cold circuit and just one hot circuit for the production of DHW while in four-pipe systems there is one hot circuit and a cold one.
There is the option to obtain an external sound-proof hydraulic module with circulation pumps for dissipation circuits, users and domestic hot water.

PLUS

- Maximum energy efficiency
- Total condensation heat recovery
- Electronic expansion valve
- Up to 4 compressors
- Remote connectivity to the most common protocols.
- Compact dimensions
- Low-noise level thanks to the paneled structure.

LEP is suitable to the air-conditioning of 2-pipe systems with production of DHW or in 4-pipe systems. In both, the total recovery of the heat ensures remarkable energy savings.

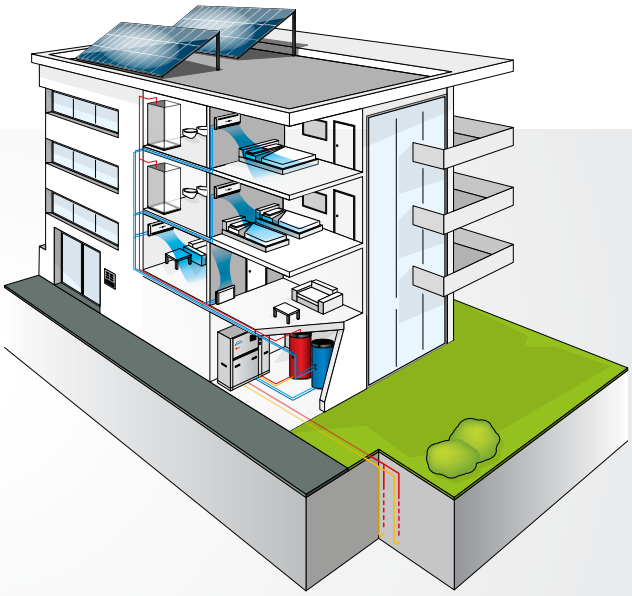

OPERATION MODE

LEP-M: chiller mode

In the "Chiller" mode the unit cools water to air condition the interior on the user side, dissipating the condensation heat by means of water that is cooled in the dissipation exchanger.

LEP-M: chiller + DHW

In the "Chiller + DHW" mode the unit can produce chilled water with the simultaneous production of high-temperature hot water for sanitary use, thanks to total heat recovery.

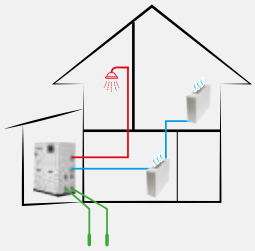

LEP-M: DHW mode

In the "high-temperature sanitary hot water (DHW)" mode the unit heats water in the condenser, dedicated to DHW as needed, dissipating the evaporative cooling capacity by means of water that is heated in the exchanger on the dissipation side.

LEP-M: heat pump mode

In the "heat pump" mode the unit heats the water in the condenser to warm the interior on the user side, dissipating the evaporative cooling capacity by means of water that is heated in the dissipation exchanger.

LEP-P: 4-pipe systems

The four-pipe system has a distribution system that offers both hot water (with respective return lines) and chilled water (with respective return lines). The LEP-P unit has a circuit used for the production of hot water and another one used for the production of cold water.

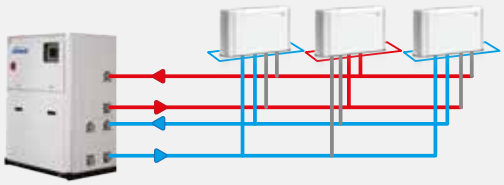

CONFIGURATION

The models are completely configurable by selecting the version and the options. To the right is shown an example of configuration.

Version	Fields▸	1	2	3	4	5	6	7	8	9
LEP214ML		2	B	P	0	2	G	0	0	B

To verify the compatibility of the options, use the selection software or the price list.

AVAILABLE VERSIONS

2-pipe system versions

LEP..MS	Standard execution
LEP-ML	Low noise execution

4-pipe system versions

LEP..PS	Standard execution
LEP-PL	Low noise execution

CONFIGURATION OPTIONS

1 - POWER SUPPLY
- 0 400/3/50 + N
- 2 400/3/50 + N + Circuit breakers

2 - CONTROL MICROPROCESSOR AND THERMAL EXPANSION VALVE
- B Programmable (LCD 8x22 display) + electronic expansion valve

3 – AIR FLOW MODULATION SOURCE SIDE
- 0 Absent
- P Condensation control with 1-10V modulated output signal

4 – AIR FLOW MODULATION USER SIDE
- 0 Absent
- D Air flow modulation with output signal in ΔT logic = cost
- T Air flow modulation with output signal in T logic = cost

5 - REMOTE COMMUNICATION
- 0 Absent
- 1 RS485 Serial board (Modbus or Carel protocol)
- 2 Lonworks serial board
- 3 GSM modem kit
- 4 Ethernet card (SNMP or BACNET protocol) + clock card
- 5 Ethernet card + clock card + supervision software

6 - VIBRATION ISOLATION
- 0 Absent
- G Rubber vibration dampers at the base of the unit
- M Spring vibration dampers at the base of the unit

7 - PACKING
- 0 Standard
- 1 Wooden crate
- 2 Wooden case

8 - REMOTE CONTROL
- 0 Absent
- 3 Remote display for programmable microprocessor

9 – INSULATED EXTERNAL HYDRAULIC MODULE SEPARATED FROM THE MAIN UNIT
- 0 Hydraulic module not present
- A LP user pump + LP dissipation + LP recovery
- B LP user pump + LP modulating dissipation + LP recovery
- C LP user pump + HP dissipation + LP recovery
- D LP user pump + HP modulating dissipation + LP recovery
- E HP user pump + LP dissipation + LP recovery
- F HP user pump + LP modulating dissipation + LP recovery
- G HP user pump + HP dissipation + LP recovery
- H HP user pump + HP modulating dissipation + LP recovery
- I LP user pump + LP dissipation + HP recovery
- J LP user pump + LP modulating dissipation + HP recovery
- K LP user pump + HP dissipation + HP recovery
- L LP user pump + HP modulating dissipation + HP recovery
- M HP user pump + LP dissipation + HP recovery
- N HP user pump + LP modulating dissipation + LP recovery
- P HP user pump + HP dissipation + LP recovery
- Q HP user pump + HP modulating dissipation + LP recovery

ACCESSORIES

- **A** Power factor correction capacitors
- **B** Soft-starter kit
- **C** Service kit (kit of sensors for quick diagnosis)
- **D** ON/OFF status of the compressors
- **E** Outdoor temperature probe for setpoint compensation
- **F** Pressure gauges
- **G** Six Victaulic couplings for quick water IN-OUT connection
- **H** Regulating filter kit (solenoid and tap on the liquid line)
- **I** 4-way flow reverse valve on user side in hydraulic module

Rated technical data of models for 2-pipe systems + DHW

LEP M		42	52	62	72	82	92
Power supply	V-ph-Hz	400-3N-50					
Cooling mode (1)							
Cooling capacity	kW	47,6	56,3	64,9	73,4	84,6	94,0
Power input	kW	10,5	13,5	14,7	17,0	18,4	21,1
EER		4,53	4,17	4,41	4,32	4,60	4,45
ESEER		6,04	5,78	6,11	6,01	6,25	6,25
User side water flow	l/h	8219	9724	11212	12685	14604	16228
User side water pressure drop	kPa	33	44	45	43	34	42
Source side water flow	l/h	9919	11888	13582	15422	17601	19645
Source side water pressure drop	kPa	44	61	47	61	47	58
Cooling mode + DHW (2)							
Cooling capacity	kW	42,5	50,6	57,8	65,8	75,5	83,9
DHW heating capacity	kW	54,5	65,7	74,5	85,1	96,6	108
Power input	kW	12,6	15,9	17,6	20,2	22,1	25,4
Total COP		7,67	7,31	7,54	7,45	7,77	7,56
User side water flow rate	l/h	7333	8735	9982	11357	13019	14474
User side water pressure drops	kPa	27	36	36	35	27	34
DHW side water flow rate	l/h	9418	11336	12861	14684	16694	18668
DHW side water pressure drops	kPa	42	58	57	56	43	54
Heating mode or DHW (3)							
Heating capacity	kW	54,3	65,4	74,2	84,6	96,1	108
Power input	kW	13,0	16,3	17,9	20,8	22,6	25,9
COP		4,18	4,01	4,15	4,07	4,25	4,15
User side water flow rate	l/h	9376	11282	12803	14611	16614	18580
User side water pressure drops	kPa	41	58	57	56	43	54
Source side water flow	l/h	12146	14467	16540	18806	21561	23970
Source side water pressure drop	kPa	64	87	67	87	67	83
General data							
Maximum current absorption	A	30	37	40	46	50	61
Startup current	A	111	156	157	164	176	203
Startup current with softstarter kit	A	73	83	102	107	117	137
No. of compressors / circuits		2/1	2/1	2/1	2/1	2/1	2/1
LEP-MS: Sound power level (4)	dB(A)	72	72	73	73	74	76
LEP-ML: Sound power level (4)	dB(A)	68	68	69	69	70	72
Transport / operating weight	kg	410	420	450	460	490	510

(1) Water temperature - user side 12 / 7°C, water temperature - dissipation side 15 / 30 °C (14511:2011)
(2) Water temperature - user side 12 / 7°C, water temperature - recovery side 40 / 45 °C
(3) Water temperature - user side 40 / 45°C, water temperature - dissipation side 15 / 10 °C (14511:2011)
(4) Sound power level measured according to UNI EN ISO 9614

Rated technical data of models for 2-pipe systems + DHW

LEP M		112	132	142	144	162	164
Power supply	V-ph-Hz	400-3N-50					
Cooling mode (1)							
Cooling capacity	kW	114	130	149	149	167	167
Power input	kW	24,3	28,3	32,5	33,4	37,0	36,9
EER		4,68	4,58	4,59	4,46	4,50	4,53
ESEER		6,48	6,43	6,17	6,09	6,17	6,24
User side water flow	l/h	19634	22375	25727	25692	28730	28873
User side water pressure drop	kPa	37	45	42	42	47	47
Source side water flow	l/h	23607	26965	31025	31136	34767	34889
Source side water pressure drop	kPa	48	61	57	58	63	64
Cooling mode + DHW (2)							
Cooling capacity	kW	102	116	133	134	149	149
DHW heating capacity	kW	130	148	170	172	191	192
Power input	kW	29,5	34,4	39,2	39,9	44,2	44,4
Total COP		7,83	7,67	7,75	7,66	7,68	7,67
User side water flow rate	l/h	17509	19938	22954	23050	25651	25738
User side water pressure drops	kPa	30	36	35	35	38	38
DHW side water flow rate	l/h	22418	25636	29462	29671	33006	33122
DHW side water pressure drops	kPa	47	57	54	55	60	60
Heating mode or DHW (3)							
Heating capacity	kW	129	148	170	171	190	191
Power input	kW	30,1	35,2	40,0	40,7	45,3	45,6
COP		4,29	4,19	4,24	4,20	4,19	4,19
User side water flow rate	l/h	22307	25508	29316	29540	32846	33016
User side water pressure drops	kPa	46	57	54	54	59	59
Source side water flow	l/h	28986	33009	38001	38191	42474	42688
Source side water pressure drop	kPa	69	88	82	83	90	92
General data							
Maximum current absorption	A	71	79	91	92	102	100
Startup current	A	275	244	289	197	298	211
Startup current with softstarter kit	A	210	182	224	140	233	152
No. of compressors / circuits		2/1	2/1	2/1	4/2	2/1	4/2
LEP-MS: Sound power level (4)	dB(A)	76	77	77	80	77	80
LEP-ML: Sound power level (4)	dB(A)	72	73	73	76	73	76
Transport / operating weight	kg	690	700	770	1010	830	1050

(1) Water temperature - user side 12 / 7°C, water temperature - dissipation side 15 / 30 °C (14511:2011)
(2) Water temperature - user side 12 / 7°C, water temperature - recovery side 40 / 45 °C
(3) Water temperature - user side 40 / 45°C, water temperature - dissipation side 15 / 10 °C (14511:2011)
(4) Sound power level measured according to UNI EN ISO 9614

Rated technical data of models for 2-pipe systems + DHW

LEP M		182	184	204	214	243	244
Power supply	V-ph-Hz	400-3N-50					
Cooling mode (1)							
Cooling capacity	kW	199	193	209	228	256	266
Power input	kW	42,9	41,2	45,1	48,4	54,5	54,4
EER		4,63	4,68	4,63	4,71	4,70	4,88
ESEER		6,29	6,33	6,46	6,44	6,37	6,62
User side water flow	l/h	34226	33248	35970	39338	44169	45744
User side water pressure drop	kPa	41	40	45	43	46	30
Source side water flow	l/h	41261	40016	43340	47280	53105	54802
Source side water pressure drop	kPa	56	54	63	60	63	37
Cooling mode + DHW (2)							
Cooling capacity	kW	177	172	186	204	230	238
DHW heating capacity	kW	226	219	238	260	292	302
Power input	kW	51,3	49,7	54,5	58,8	65,3	66,7
Total COP		7,86	7,87	7,79	7,88	7,98	8,09
User side water flow rate	l/h	30513	29627	32115	35085	39581	40986
User side water pressure drops	kPa	34	32	37	35	38	24
DHW side water flow rate	l/h	39076	37935	41197	44897	50482	52229
DHW side water pressure drops	kPa	53	51	58	55	58	38
Heating mode or DHW (3)							
Heating capacity	kW	225	218	237	258	290	299
Power input	kW	52,3	50,7	55,9	60,1	66,9	67,8
COP		4,30	4,31	4,24	4,30	4,34	4,41
User side water flow rate	l/h	38889	37800	40982	44703	50201	51848
User side water pressure drops	kPa	52	50	57	55	58	37
Source side water flow	l/h	50535	49162	53122	58132	65483	67620
Source side water pressure drop	kPa	81	78	90	87	92	54
General data							
Maximum current absorption	A	116	122	132	142	153	159
Startup current	A	361	250	321	328	336	301
Startup current with softstarter kit	A	278	184	256	263	271	239
No. of compressors / circuits		2/1	4/2	4/2	4/2	3/1	4/2
LEP-MS: Sound power level (4)	dB(A)	78	81	81	81	81	82
LEP-ML: Sound power level (4)	dB(A)	74	77	77	77	77	78
Transport / operating weight	kg	890	1130	1280	1350	1850	1840

(1) Water temperature - user side 12 / 7°C, water temperature - dissipation side 15 / 30 °C (14511:2011)
(2) Water temperature - user side 12 / 7°C, water temperature - recovery side 40 / 45 °C
(3) Water temperature - user side 40 / 45°C, water temperature - dissipation side 15 / 10 °C (14511:2011)
(4) Sound power level measured according to UNI EN ISO 9614

Rated technical data of models for 2-pipe systems + DHW

LEP M		283	284	314	344	374	424
Power supply	V-ph-Hz	400-3N-50					
Cooling mode (1)							
Cooling capacity	kW	294	298	328	359	390	445
Power input	kW	63,8	63,7	73,3	79,3	85,4	95,0
EER		4,61	4,67	4,47	4,52	4,56	4,68
ESEER		6,34	6,21	6,15	6,13	6,20	6,45
User side water flow	l/h	50710	51237	56518	61829	67117	76633
User side water pressure drop	kPa	35	36	43	42	41	42
Source side water flow	l/h	61268	61798	68600	74910	81217	92312
Source side water pressure drop	kPa	46	48	58	56	56	58
Cooling mode + DHW (2)							
Cooling capacity	kW	263	267	294	321	349	396
DHW heating capacity	kW	336	340	378	411	446	508
Power input	kW	76,5	77,3	88,1	95,1	102	118
Total COP		7,83	7,85	7,63	7,70	7,76	7,68
User side water flow rate	l/h	45343	45905	50624	55270	60024	68143
User side water pressure drops	kPa	29	29	35	34	34	34
DHW side water flow rate	l/h	58202	58887	65356	71210	77195	87885
DHW side water pressure drops	kPa	45	46	56	54	53	54
Heating mode or DHW (3)							
Heating capacity	kW	334	339	376	409	444	505
Power input	kW	77,8	78,7	89,8	97,1	105	120
COP		4,30	4,30	4,19	4,22	4,25	4,20
User side water flow rate	l/h	57875	58631	65061	70840	76847	87416
User side water pressure drops	kPa	44	46	55	54	53	54
Source side water flow	l/h	75020	76063	83902	91484	99445	112768
Source side water pressure drop	kPa	66	69	84	81	80	83
General data							
Maximum current absorption	A	174	182	204	218	232	281
Startup current	A	401	355	374	437	442	490
Startup current with softstarter kit	A	318	290	309	354	359	420
No. of compressors / circuits		3/1	4/2	4/2	4/2	4/2	4/2
LEP-MS: Sound power level (4)	dB(A)	81	82	82	83	83	83
LEP-ML: Sound power level (4)	dB(A)	77	78	78	79	79	79
Transport / operating weight	kg	1880	1940	2040	2110	2180	2380

(1) Water temperature - user side 12 / 7°C, water temperature - dissipation side 15 / 30 °C (14511:2011)
(2) Water temperature - user side 12 / 7°C, water temperature - recovery side 40 / 45 °C
(3) Water temperature - user side 40 / 45°C, water temperature - dissipation side 15 / 10 °C (14511:2011)
(4) Sound power level measured according to UNI EN ISO 9614

Rated technical data of models for 4-pipe systems

LEP P		42	52	62	72	82	92
Power supply	V-ph-Hz	400-3N-50					
Cooling mode (1)							
Cooling capacity	kW	47,6	56,3	64,9	73,4	84,6	94,0
Power input	kW	10,5	13,5	14,7	17,0	18,4	21,1
EER		4,53	4,17	4,41	4,32	4,60	4,45
ESEER		6,04	5,78	6,11	6,01	6,25	6,25
User side water flow	l/h	8219	9724	11212	12685	14604	16228
User side water pressure drop	kPa	33	44	45	43	34	42
Source side water flow	l/h	9919	11888	13582	15422	17601	19645
Source side water pressure drop	kPa	44	61	47	61	47	58
Cooling and heating mode in total heat recovery (2)							
Cooling capacity	kW	42,5	50,6	57,8	65,8	75,5	83,9
Heating capacity	kW	54,5	65,7	74,4	85,1	96,6	108
Power input	kW	12,6	15,9	17,5	20,2	22,1	25,4
Total COP		7,67	7,32	7,57	7,46	7,77	7,56
Cooling side water flow rate	l/h	7333	8735	9982	11357	13019	14474
Cooling side water pressure drops	kPa	27	36	36	35	27	34
Heating side water flow rate	l/h	9418	11336	12861	14684	16694	18668
Heating side water pressure drops	kPa	40	56	43	56	43	53
Heating mode (3)							
Heating capacity	kW	54,3	65,4	74,2	84,6	96,1	108
Power input	kW	13,0	16,3	17,9	20,8	22,6	25,9
COP		4,18	4,01	4,15	4,07	4,25	4,15
User side water flow rate	l/h	9376	11282	12803	14611	16614	18580
User side water pressure drops	kPa	41	58	57	56	43	54
Source side water flow	l/h	12146	14467	16540	18806	21561	23970
Source side water pressure drop	kPa	64	87	67	87	67	83
General data							
Maximum current absorption	A	30	37	40	46	50	61
Startup current	A	111	156	157	164	176	203
Startup current with softstarter kit	A	73	83	102	107	117	137
No. of compressors / circuits		2/1	2/1	2/1	2/1	2/1	2/1
LEP-PS: Sound power level (4)	dB(A)	72	72	73	73	74	76
LEP-PL: Sound power level (4)	dB(A)	68	68	69	69	70	72
Transport / operating weight	kg	410	420	450	460	490	510

(1) Water temperature - user side 12 / 7°C, water temperature - dissipation side 15 / 30 °C (14511:2011)
(2) Water temperature - user side 12 / 7°C, water temperature - recovery side 40 / 45 °C
(3) Water temperature - user side 40 / 45°C, water temperature - dissipation side 15 / 10 °C (14511:2011)
(4) Sound power level measured according to UNI EN ISO 9614

Rated technical data of models for 4-pipe systems

LEP P		112	132	142	144	162	164
Power supply	V-ph-Hz	400-3N-50					
Cooling mode (1)							
Cooling capacity	kW	114	130	149	149	167	167
Power input	kW	24,3	28,3	32,5	33,4	37,0	36,9
EER		4,68	4,58	4,59	4,46	4,50	4,53
ESEER		6,48	6,43	6,17	6,09	6,17	6,24
User side water flow	l/h	19634	22375	25727	25692	28730	28873
User side water pressure drop	kPa	37	45	42	42	47	47
Source side water flow	l/h	23607	26965	31025	31136	34767	34889
Source side water pressure drop	kPa	48	61	57	58	63	64
Cooling and heating mode in total heat recovery (2)							
Cooling capacity	kW	102	116	133	134	149	149
Heating capacity	kW	130	148	170	172	191	192
Power input	kW	29,5	34,4	39,2	39,9	44,2	44,4
Total COP		7,83	7,67	7,75	7,66	7,68	7,67
Cooling side water flow rate	l/h	17509	19938	22954	23050	25651	25738
Cooling side water pressure drops	kPa	30	36	35	35	38	38
Heating side water flow rate	l/h	22418	25636	29462	29671	33006	33122
Heating side water pressure drops	kPa	43	56	52	53	57	58
Heating mode (3)							
Heating capacity	kW	129	148	170	171	190	191
Power input	kW	30,1	35,2	40,0	40,7	45,3	45,6
COP		4,29	4,19	4,24	4,20	4,19	4,19
User side water flow rate	l/h	22307	25508	29316	29540	32846	33016
User side water pressure drops	kPa	46	57	54	54	59	59
Source side water flow	l/h	28986	33009	38001	38191	42474	42688
Source side water pressure drop	kPa	69	88	82	83	90	92
General data							
Maximum current absorption	A	71	79	91	92	102	100
Startup current	A	275	244	289	197	298	211
Startup current with softstarter kit	A	210	182	224	140	233	152
No. of compressors / circuits		2/1	2/1	2/1	4/2	2/1	4/2
LEP-PS: Sound power level (4)	dB(A)	76	77	77	80	77	80
LEP-PL: Sound power level (4)	dB(A)	72	73	73	76	73	76
Transport / operating weight	kg	690	700	770	1010	830	1050

(1) Water temperature - user side 12 / 7°C, water temperature - dissipation side 15 / 30 °C (14511:2011)
(2) Water temperature - user side 12 / 7°C, water temperature - recovery side 40 / 45 °C
(3) Water temperature - user side 40 / 45°C, water temperature - dissipation side 15 / 10 °C (14511:2011)
(4) Sound power level measured according to UNI EN ISO 9614

Rated technical data of models for 4-pipe systems

LEP P		182	184	204	214	243	244
Power supply	V-ph-Hz	400-3N-50					
Cooling mode (1)							
Cooling capacity	kW	199	193	209	228	256	266
Power input	kW	42,9	41,2	45,1	48,4	54,5	54,4
EER		4,63	4,68	4,63	4,71	4,70	4,88
ESEER		6,29	6,33	6,46	6,44	6,37	6,62
User side water flow	l/h	34226	33248	35970	39338	44169	45744
User side water pressure drop	kPa	41	40	45	43	46	30
Source side water flow	l/h	41261	40016	43340	47280	53105	54802
Source side water pressure drop	kPa	56	54	63	60	63	37
Cooling and heating mode in total heat recovery (2)							
Cooling capacity	kW	177	172	186	204	230	238
Heating capacity	kW	226	219	238	260	292	302
Power input	kW	51,3	49,7	54,5	58,8	65,3	66,7
Total COP		7,86	7,87	7,79	7,88	7,98	8,09
Cooling side water flow rate	l/h	30513	29627	32115	35085	39581	40986
Cooling side water pressure drops	kPa	34	32	37	35	38	24
Heating side water flow rate	l/h	39076	37935	41197	44897	50482	52229
Heating side water pressure drops	kPa	51	49	57	54	58	34
Heating mode (3)							
Heating capacity	kW	225	218	237	258	290	299
Power input	kW	52,3	50,7	55,9	60,1	66,9	67,8
COP		4,30	4,31	4,24	4,30	4,34	4,41
User side water flow rate	l/h	38889	37800	40982	44703	50201	51848
User side water pressure drops	kPa	52	50	57	55	58	37
Source side water flow	l/h	50535	49162	53122	58132	65483	67620
Source side water pressure drop	kPa	81	78	90	87	92	54
General data							
Maximum current absorption	A	116	122	132	142	153	159
Startup current	A	361	250	321	328	336	301
Startup current with softstarter kit	A	278	184	256	263	271	239
No. of compressors / circuits		2/1	4/2	4/2	4/2	3/1	4/2
LEP-PS: Sound power level (4)	dB(A)	78	81	81	81	81	82
LEP-PL: Sound power level (4)	dB(A)	74	77	77	77	77	78
Transport / operating weight	kg	890	1130	1280	1350	1850	1840

(1) Water temperature - user side 12 / 7°C, water temperature - dissipation side 15 / 30 °C (14511:2011)
(2) Water temperature - user side 12 / 7°C, water temperature - recovery side 40 / 45 °C
(3) Water temperature - user side 40 / 45°C, water temperature - dissipation side 15 / 10 °C (14511:2011)
(4) Sound power level measured according to UNI EN ISO 9614

Rated technical data of models for 4-pipe systems

LEP P		283	284	314	344	374	424
Power supply	V-ph-Hz	400-3N-50					
Cooling mode (1)							
Cooling capacity	kW	294	298	328	359	390	445
Power input	kW	63,8	63,7	73,3	79,3	85,4	95,0
EER		4,61	4,67	4,47	4,52	4,56	4,68
ESEER		6,34	6,21	6,15	6,13	6,20	6,45
User side water flow	l/h	50710	51237	56518	61829	67117	76633
User side water pressure drop	kPa	35	36	43	42	41	42
Source side water flow	l/h	61268	61798	68600	74910	81217	92312
Source side water pressure drop	kPa	46	48	58	56	56	58
Cooling and heating mode in total heat recovery (2)							
Cooling capacity	kW	263	267	294	321	349	396
Heating capacity	kW	336	340	378	411	446	508
Power input	kW	76,5	77,3	88,1	95,1	102	118
Total COP		7,83	7,85	7,63	7,70	7,76	7,68
Cooling side water flow rate	l/h	45343	45905	50624	55270	60024	68143
Cooling side water pressure drops	kPa	29	29	35	34	34	34
Heating side water flow rate	l/h	58202	58887	65356	71210	77195	87885
Heating side water pressure drops	kPa	42	44	53	52	51	51
Heating mode (3)							
Heating capacity	kW	334	339	376	409	444	505
Power input	kW	77,8	78,7	89,8	97,1	105	120
COP		4,30	4,30	4,19	4,22	4,25	4,20
User side water flow rate	l/h	57875	58631	65061	70840	76847	87416
User side water pressure drops	kPa	44	46	55	54	53	54
Source side water flow	l/h	75020	76063	83902	91484	99445	112768
Source side water pressure drop	kPa	66	69	84	81	80	83
General data							
Maximum current absorption	A	174	182	204	218	232	281
Startup current	A	401	355	374	437	442	490
Startup current with softstarter kit	A	318	290	309	354	359	420
No. of compressors / circuits		3/1	4/2	4/2	4/2	4/2	4/2
LEP-PS: Sound power level (4)	dB(A)	81	82	82	83	83	83
LEP-PL: Sound power level (4)	dB(A)	77	78	78	79	79	79
Transport / operating weight	kg	1880	1940	2040	2110	2180	2380

(1) Water temperature - user side 12 / 7°C, water temperature - dissipation side 15 / 30 °C (14511:2011)
(2) Water temperature - user side 12 / 7°C, water temperature - recovery side 40 / 45 °C
(3) Water temperature - user side 40 / 45°C, water temperature - dissipation side 15 / 10 °C (14511:2011)
(4) Sound power level measured according to UNI EN ISO 9614

Dimensional drawings

LEP 041 - 092

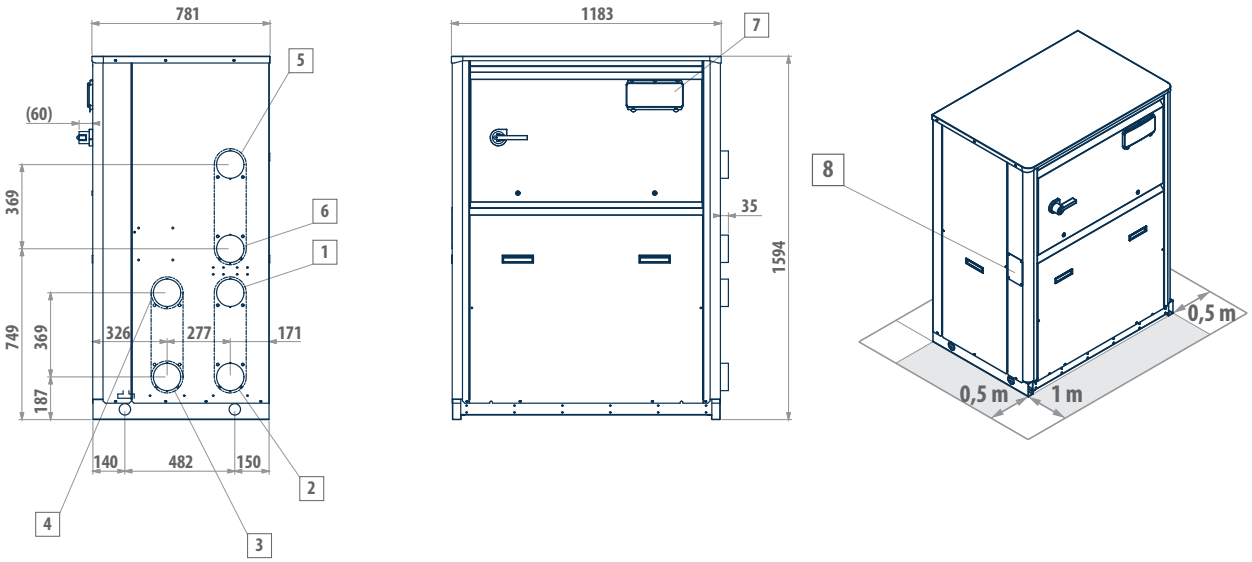

LEP 112 - 182

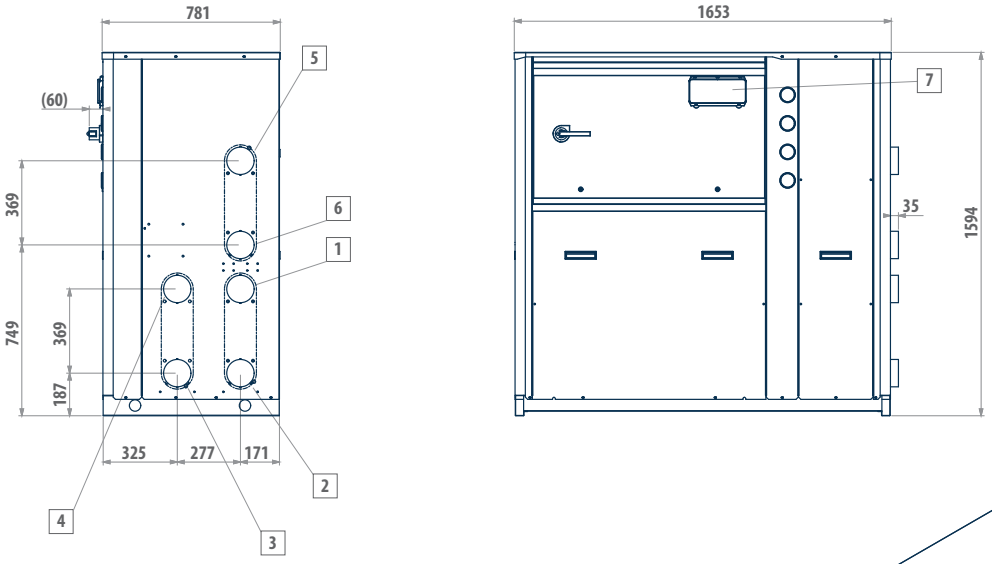

LEGEND	
1	User side - inlet (Victaulic 2½")
2	User side - outlet (Victaulic 2½")
3	DHW side - inlet (Victaulic 2½")
4	DHW side - outlet (Victaulic 2½")
5	Dissipation side - inlet (Victaulic 2½")
6	Dissipation side - outlet (Victaulic 2½")
7	User interface
8	Power supply input

Model	Version	
LEP 112	M-P	S-L
LEP 132	M-P	S-L
LEP 142	M-P	S-L
LEP 162	M-P	S-L
LEP 182	M-P	S-L

Dimensional drawings

LEP 144 - 184

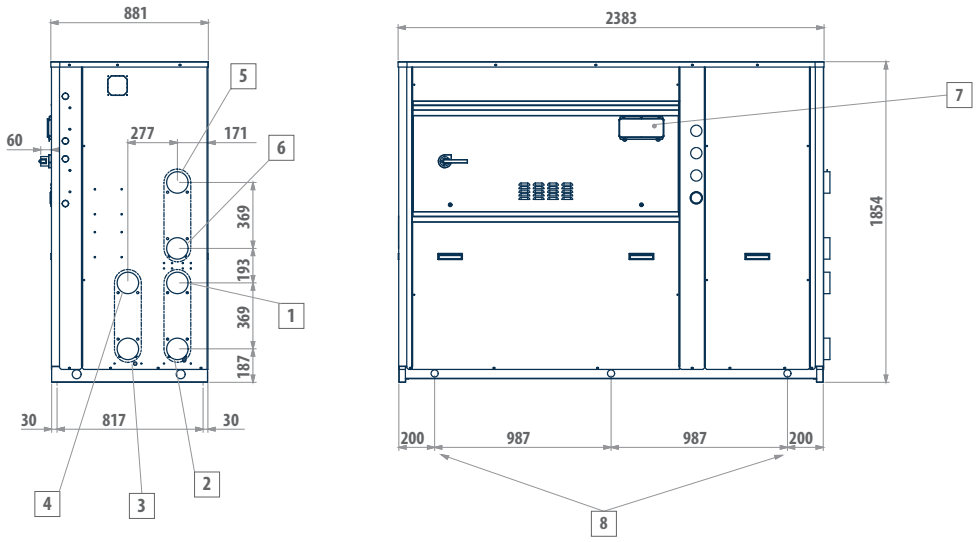

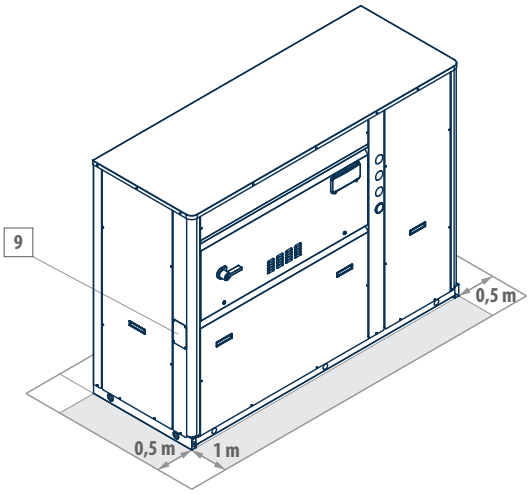

LEGEND	
1	User side - inlet (Victaulic 2½")
2	User side - outlet (Victaulic 2½")
3	DHW side - inlet (Victaulic 2½")
4	DHW side - outlet (Victaulic 2½")
5	Dissipation side - inlet (Victaulic 2½")
6	Dissipation side - outlet (Victaulic 2½")
7	User interface
8	Fastening points
9	Power supply input

Model	Version	
LEP 144	M-P	S-L
LEP 164	M-P	S-L
LEP 184	M-P	S-L

Dimensional drawings

LEP 204 - 214

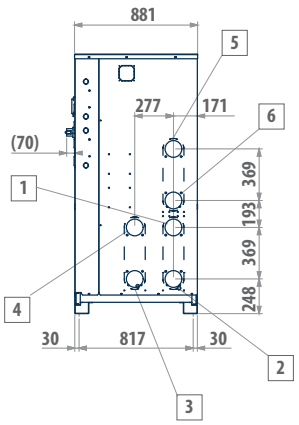

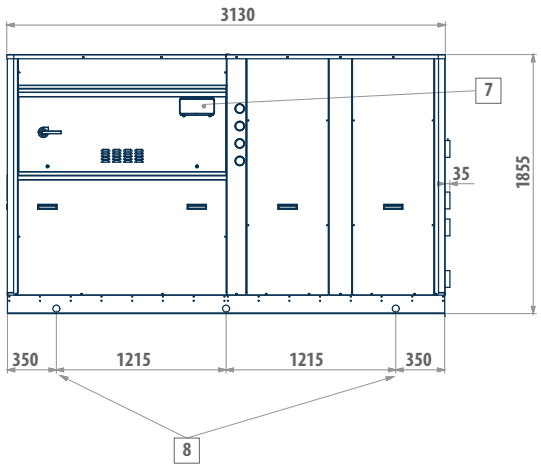

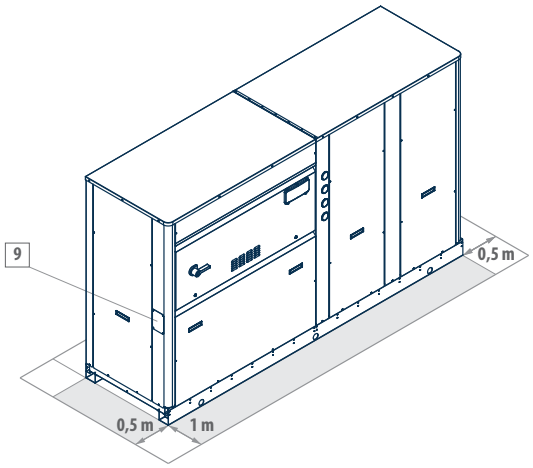

LEGEND

1	User side - inlet (Victaulic 2½")
2	User side - outlet (Victaulic 2½")
3	DHW side - inlet (Victaulic 2½")
4	DHW side - outlet (Victaulic 2½")
5	Dissipation side - inlet (Victaulic 2½")
6	Dissipation side - outlet (Victaulic 2½")
7	User interface
8	Fastening points
9	Power supply input

Model	Version	
LEP 204	M-P	S-L
LEP 214	M-P	S-L

Dimensional drawings

LEP 243 - 424

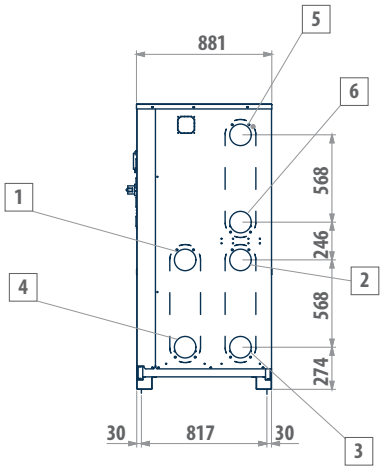

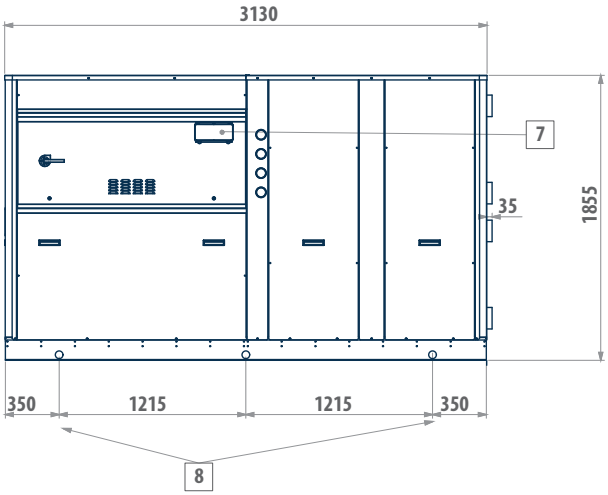

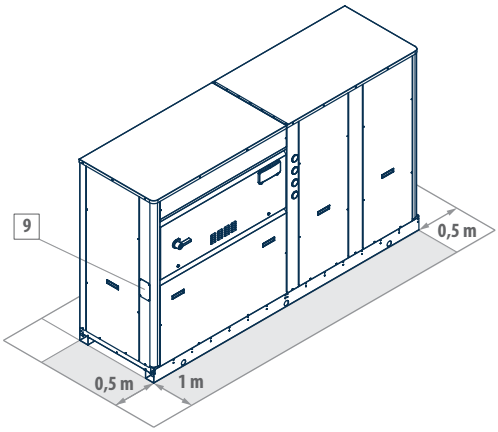

LEGEND

1	User side - inlet (Victaulic 2½")
2	User side - outlet (Victaulic 2½")
3	DHW side - inlet (Victaulic 2½")
4	DHW side - outlet (Victaulic 2½")
5	Dissipation side - inlet (Victaulic 2½")
6	Dissipation side - outlet (Victaulic 2½")
7	User interface
8	Fastening points
9	Power supply input

Model	Version	
LEP 243	M-P	S-L
LEP 244	M-P	S-L
LEP 283	M-P	S-L
LEP 284	M-P	S-L
LEP 314	M-P	S-L
LEP 344	M-P	S-L
LEP 374	M-P	S-L
LEP 424	M-P	S-L